NOTES:

1. USAWECOM PD-50 APPLIES.
2. INSPECTION MARK AFTER TEST FIRING. INSPECTION MARKING SHALL BE TEMPORARY USING INK STAMP.
3. MIL-W-13855 APPLIES.

REVISIONS					
MF	ZONE	LTR	DESCRIPTION	DATE	APPROVED

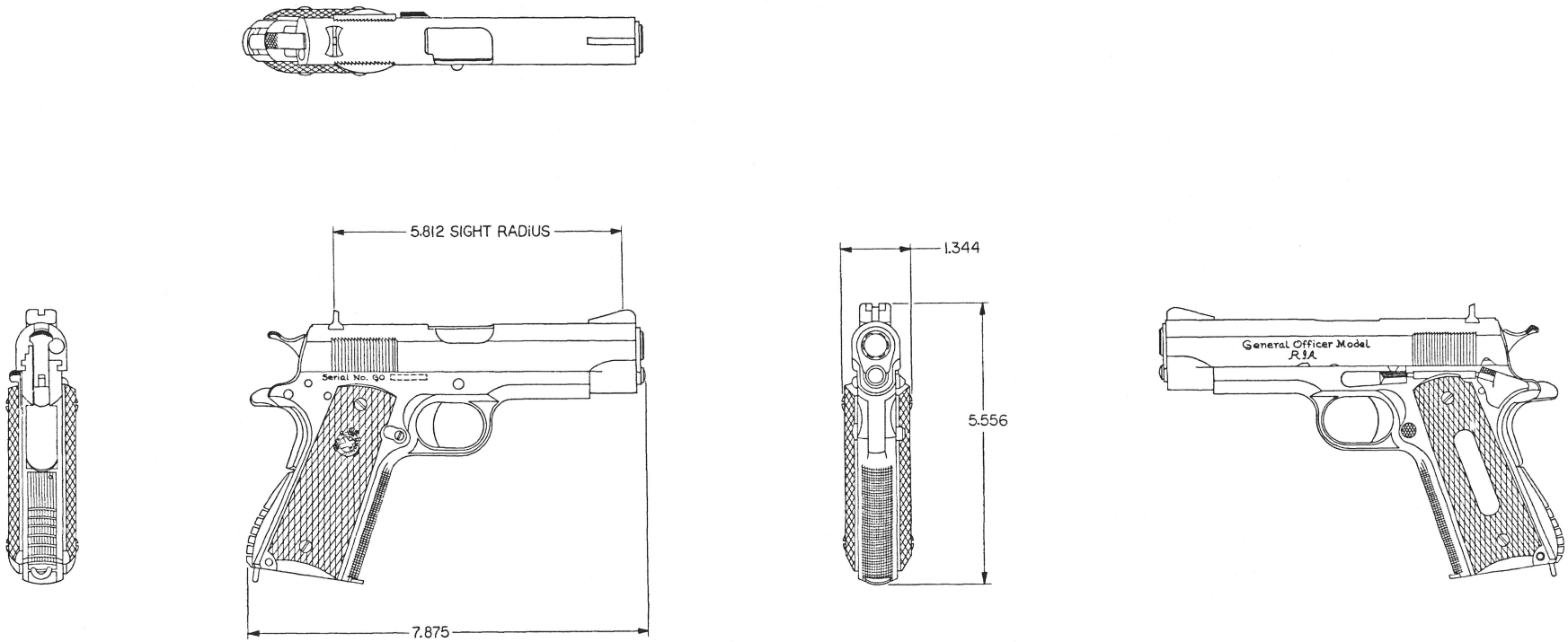

SEE PL-12006306

PART NO. 12006306

MECHANICAL PROPERTIES			
YS MIN			
YS MAX			
EL 2			
RA		12006300	PISTOL, CAL.45
BH			AUTO: GENERAL
			OFFICER, M15
RH		NEXT ASSY	USED ON
		APPLICATION	

UNLESS OTHERWISE SPECIFIED DIMENSIONS ARE IN INCHES
TOLERANCES:
ANGLES ± —
3 PLACE DECIMALS ± .030
2 PLACE DECIMALS ± —

MATERIAL

FINAL PROTECTIVE FINISH

CONTRACT NO.

DATE 19 JUN 73

PREPARED R. Tussig
CHECKED R. W. DeAmmond
ENGINEER E. Winter
SUBMITTED E. Winter
APPROVED J. A. Cole

DEPT OF THE ARMY
US ARMY WEAPONS COMMAND
ROCK ISLAND, ILLINOIS, 61201

PISTOL, CAL.45 AUTO: GENERAL OFFICER, M15

SIZE	CODE IDENT NO	DRAWING NO
F	19204	12006306

SCALE 1/1 SHEET 1 OF 3

REVISIONS					
MF	ZONE	LTR	DESCRIPTION	DATE	APPROVED

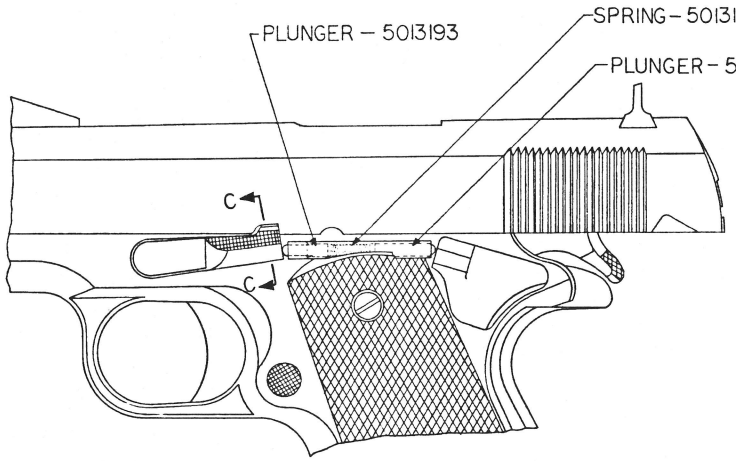

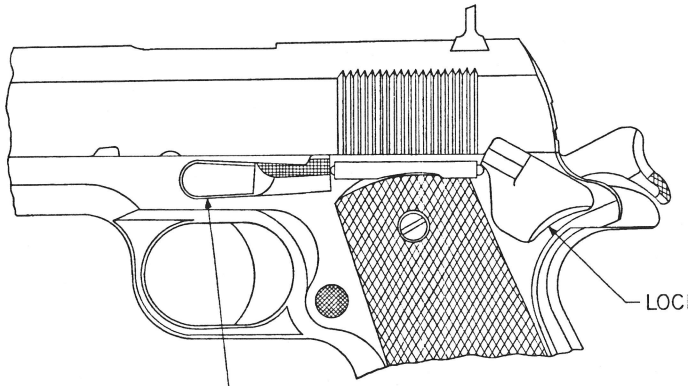

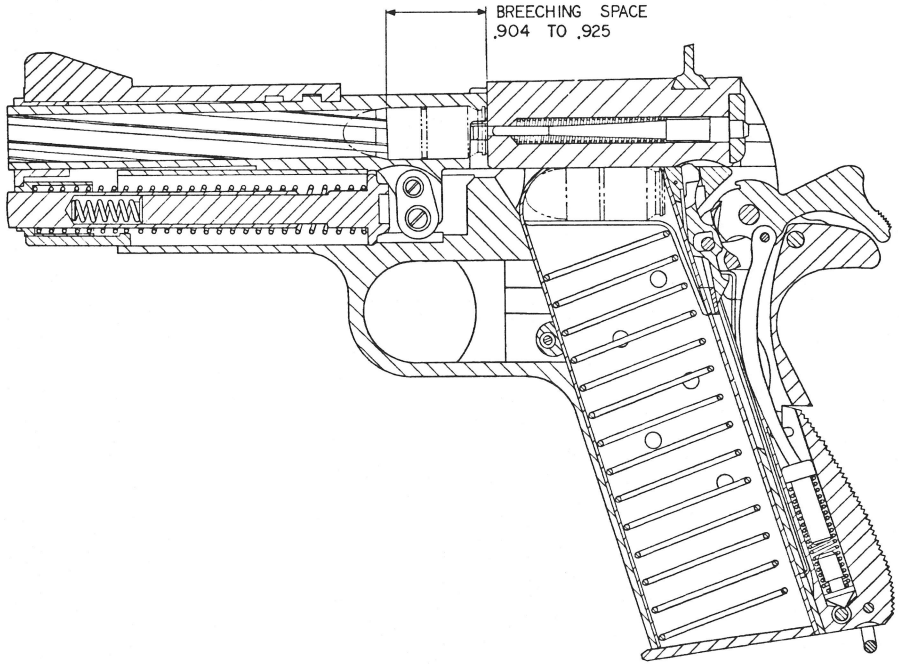

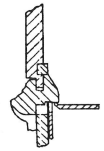

SECTION C-C (ROTATED CLOCKWIZE 10°)

MAGAZINE FOLLOWER IN CONTACT WITH SLIDE STOP

MECHANICAL PROPERTIES	
YS MIN	
YS MAX	
EL 2	
RA	
BH	
RH	

NEXT ASSY | USED ON

APPLICATION

UNLESS OTHERWISE SPECIFIED DIMENSIONS ARE IN INCHES
TOLERANCES
ANGLES ±
3 PLACE DECIMALS ±
2 PLACE DECIMALS ±

MATERIAL

FINAL PROTECTIVE FINISH

CONTRACT NO.

DATE 19 JUN 73

PREPARED
CHECKED
ENGINEER
SUBMITTED E. Winter
APPROVED

PART NO. 12006306

DEPT OF THE ARMY
U.S. ARMY WEAPONS COMMAND
ROCK ISLAND, ILLINOIS, 61201

PISTOL, CAL. 45 AUTO. GEN. OFF., M15 (SECTIONAL AND EXTERIOR VIEWS)

SIZE	CODE IDENT NO	DRAWING NO
F	19204	12006306

SCALE 2/1 SHEET 2 OF 3

REVISIONS					
MF	ZONE	LTR	DESCRIPTION	DATE	APPROVED

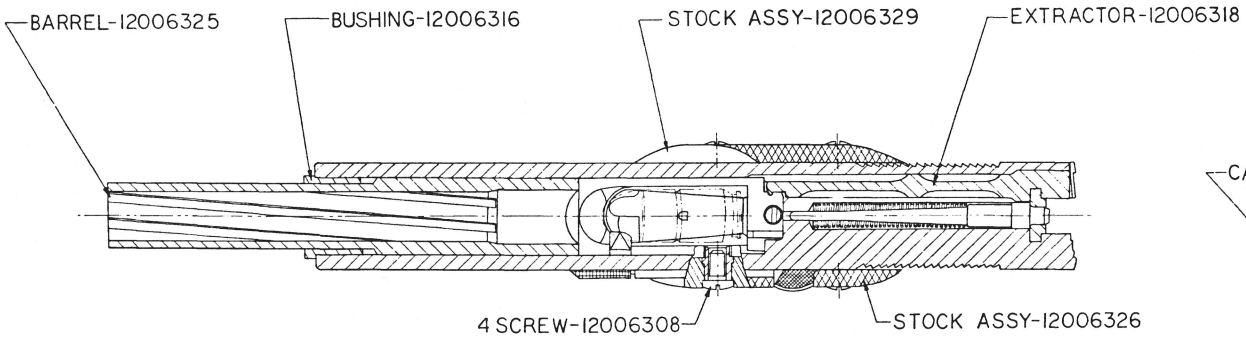

SECTION ON CENTER LINES OF BARREL, FIRING PIN, AND EXTRACTOR

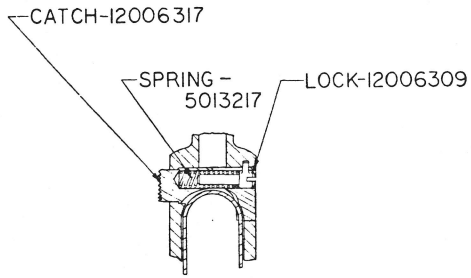

SECTION B-B (ROTATED 15° CLOCKWISE)
MAGAZINE LOCKED BY MAGAZINE CATCH

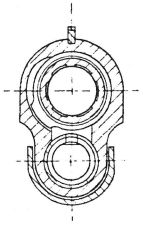

SECTION A-A
BARREL BUSHING LOCK IN POSITION

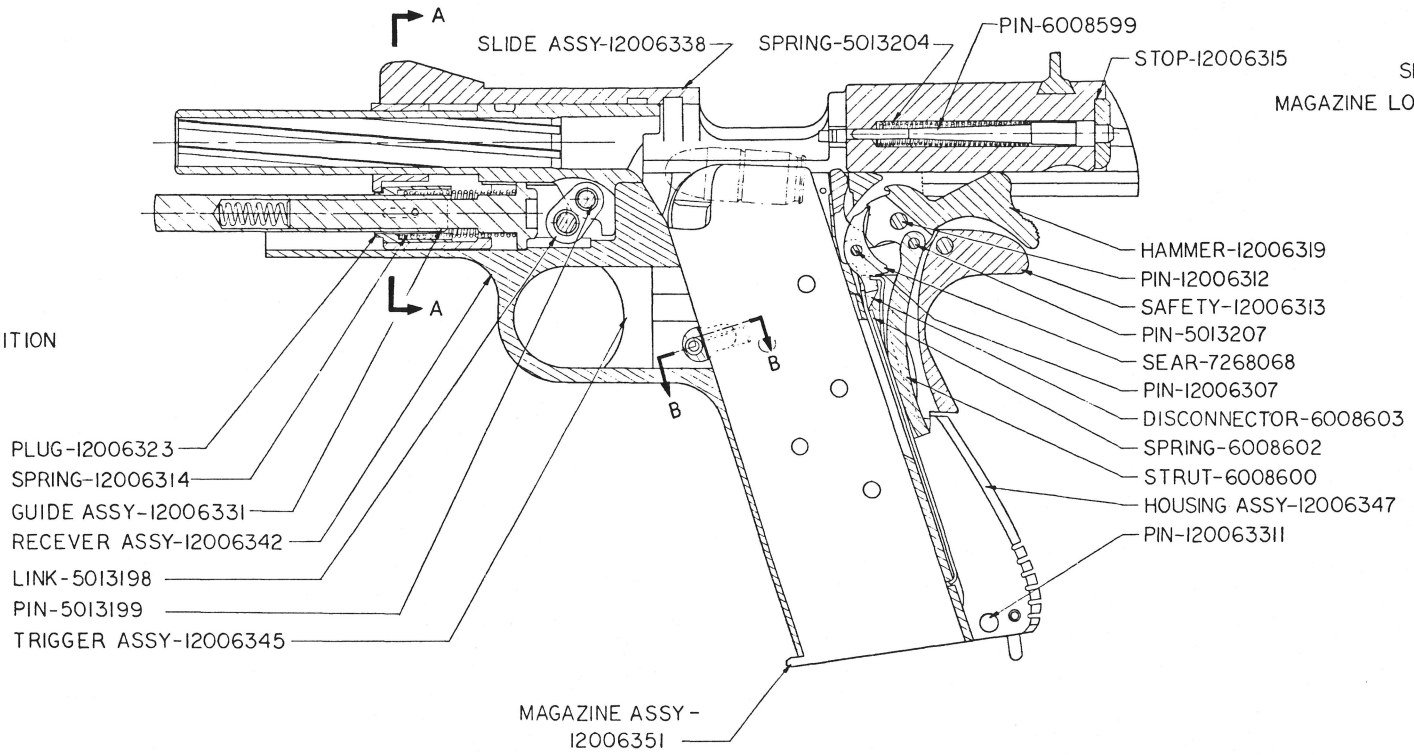

PART NO. 12006306

MECHANICAL PROPERTIES				UNLESS OTHERWISE SPECIFIED DIMENSIONS ARE IN INCHES TOLERANCES ANGLES ± — 3 PLACE DECIMALS ± — 2 PLACE DECIMALS ± —	CONTRACT NO.	DEPT OF THE ARMY US ARMY WEAPONS COMMAND ROCK ISLAND, ILLINOIS, 61201
YS MIN				MATERIAL	DATE 19 JUN 73	PISTOL, CAL. .45 AUTO: GEN OFF., M15 (SECTIONAL VIEWS)
YS MAX					PREPARED [signature]	
EL 2					CHECKED [signature]	
RA					ENGINEER E. Winter	
BH					SUBMITTED E. Winter	SIZE F · CODE IDENT NO 19204 · DRAWING NO 12006306
RH		NEXT ASSY	USED ON	FINAL PROTECTIVE FINISH	APPROVED A. A. Cole	SCALE 2/1 · SHEET 3 OF 3
		APPLICATION				